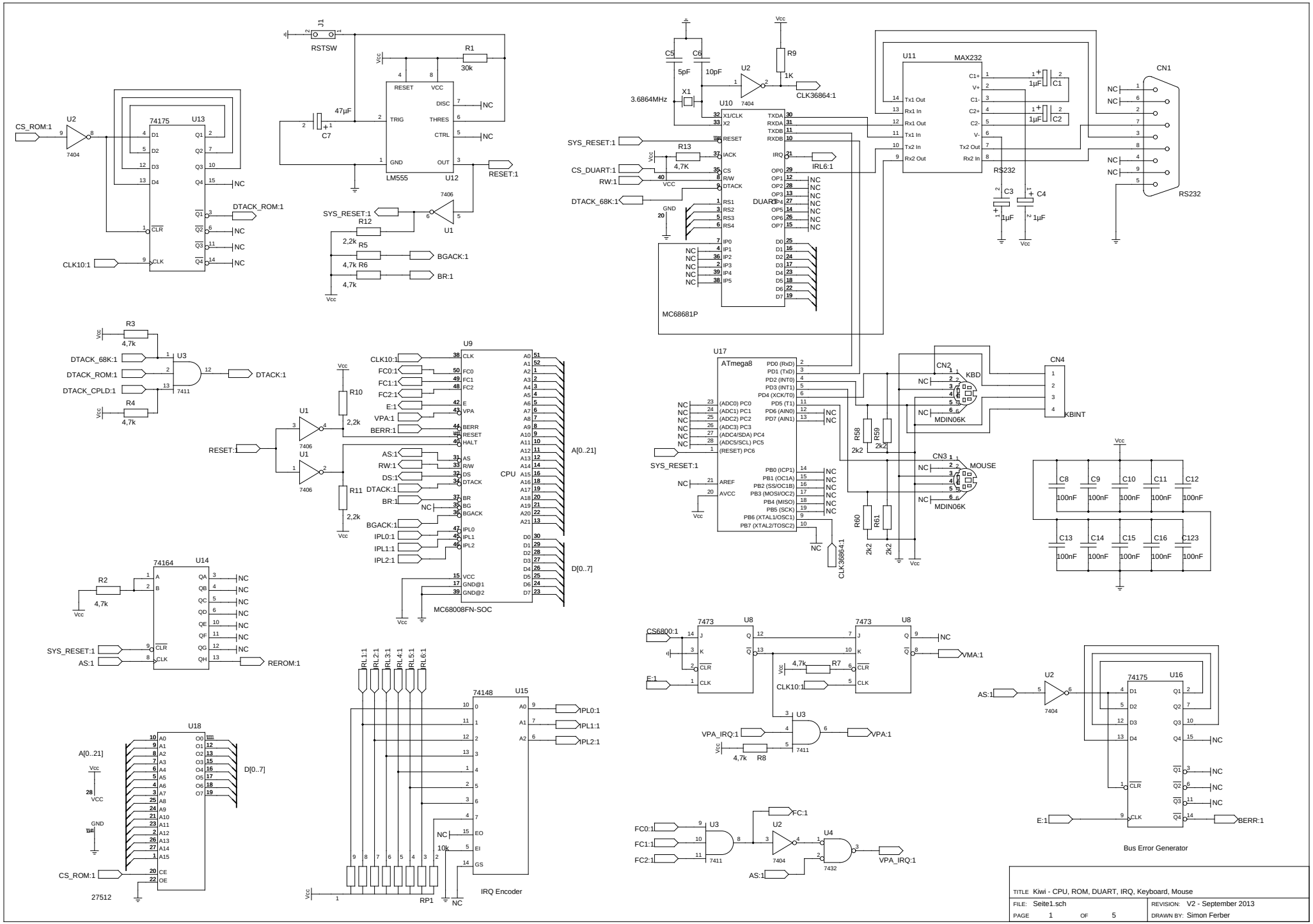

TITLE Kiwi - CPU, ROM, DUART, IRQ, Keyboard, Mouse

FILE: Seite1.sch | REVISION: V2 - September 2013

PAGE 1 OF 5 | DRAWN BY: Simon Ferber

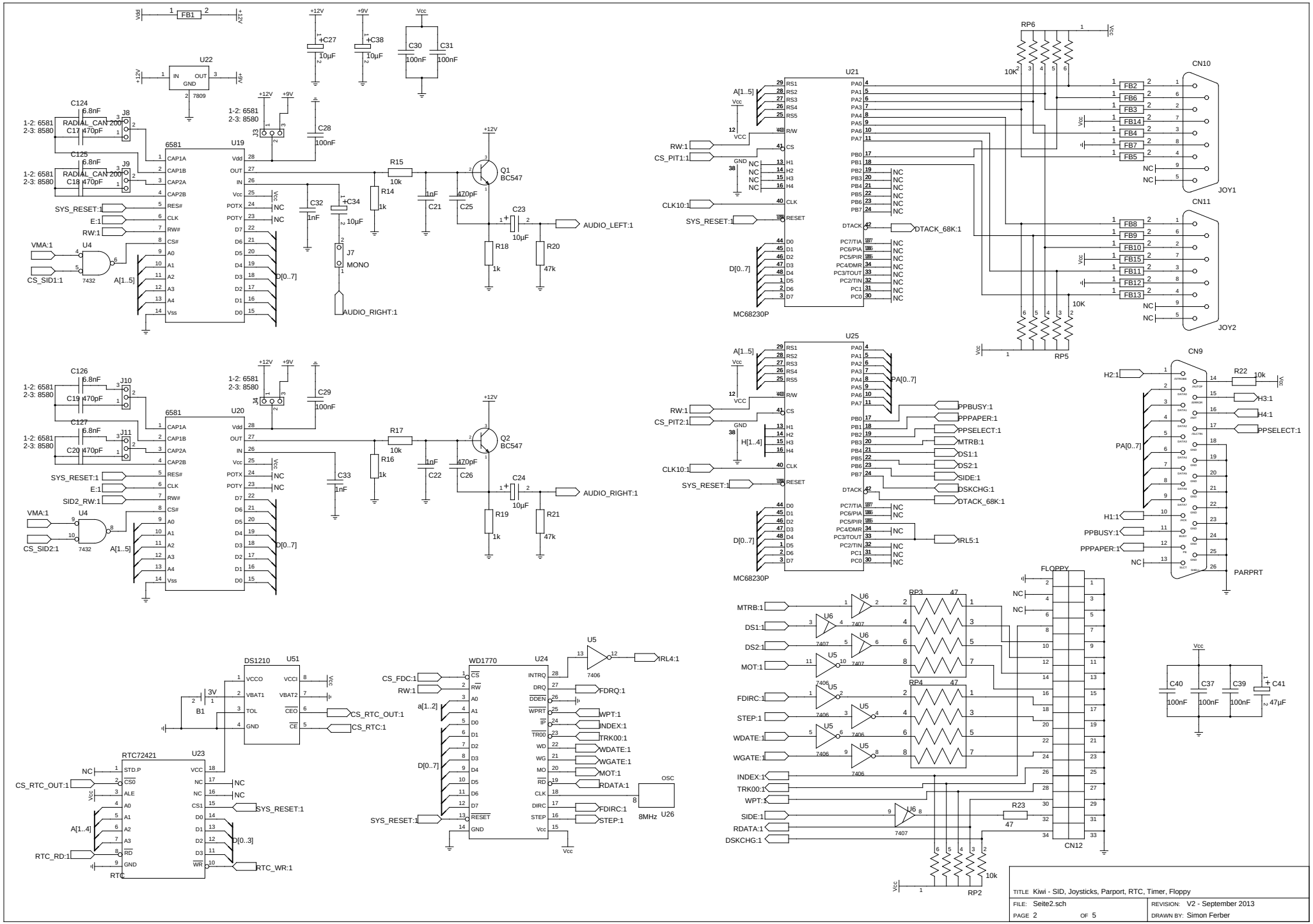
FB1
U22
7809
C27 10µF
C38 10µF
C30 100nF
C31 100nF
C28 100nF
C124 6.8nF
C17 470pF
C125 6.8nF
C18 470pF
RADIAL_CAN_200
J8
J9
J3
1-2: 6581
2-3: 8580
U19
6581
CAP1A
CAP1B
CAP2A
CAP2B
RES#
CLK
RW#
CS#
A0
A1
A2
A3
A4
Vss
Vdd
OUT
IN
Vcc
POTX
POTY
D7
D6
D5
D4
D3
D2
D1
D0
SYS_RESET:1
E:1
RW:1
VMA:1
CS_SID1:1
U4
7432
A[1..5]
D[0..7]
C32 1nF
C34 10µF
J7
MONO
AUDIO_RIGHT:1
R15 10k
R14 1k
C21 1nF
C25 470pF
Q1
BC547
C23 10µF
R18 1k
R20 47k
AUDIO_LEFT:1
C126 6.8nF
C19 470pF
C127 6.8nF
C20 470pF
J10
J11
J4
U20
SYS_RESET:1
E:1
SID2_RW:1
VMA:1
CS_SID2:1
C29 100nF
C33 1nF
R17 10k
R16 1k
C22 1nF
C26 470pF
Q2
BC547
C24 10µF
R19 1k
R21 47k
AUDIO_RIGHT:1
DS1210
U51
VCCO
VBAT1
TOL
GND
VCCI
VBAT2
CEO
CE
B1 3V
CS_RTC_OUT:1
CS_RTC:1
RTC72421
U23
STD.P
CS0
ALE
A0
A1
A2
A3
RD
GND
VCC
CS1
D0
D1
D2
D3
WR
RTC_RD:1
RTC_WR:1
SYS_RESET:1
D[0..3]
RTC
WD1770
U24
CS
RW
A0
A1
D0
D1
D2
D3
D4
D5
D6
D7
RESET
GND
INTRQ
DRQ
DDEN
WPRT
IP
TR00
WD
WG
MO
RD
CLK
DIRC
STEP
Vcc
CS_FDC:1
RW:1
a[1..2]
D[0..7]
SYS_RESET:1
FDRQ:1
WPT:1
INDEX:1
TRK00:1
WDATE:1
WGATE:1
MOT:1
RDATA:1
FDIRC:1
STEP:1
U5
7406
IRL4:1
OSC
8MHz
U26
RP6
10K
U21
MC68230P
A[1..5]
RW:1
CS_PIT1:1
CLK10:1
SYS_RESET:1
D[0..7]
DTACK
DTACK_68K:1
CN10
JOY1
CN11
JOY2
FB2
FB6
FB3
FB14
FB4
FB7
FB5
FB8
FB9
FB10
FB15
FB11
FB12
FB13
RP5
U25
PA[0..7]
H[1..4]
PPBUSY:1
PPPAPER:1
PPSELECT:1
MTRB:1
DS1:1
DS2:1
SIDE:1
DSKCHG:1
DTACK_68K:1
IRL5:1
CN9
R22 10k
H2:1
H3:1
H4:1
PPSELECT:1
H1:1
PPBUSY:1
PPPAPER:1
PARPRT
FLOPPY
CN12
RP3 47
RP4 47
U6
7407
MTRB:1
DS1:1
DS2:1
MOT:1
FDIRC:1
STEP:1
WDATE:1
WGATE:1
INDEX:1
TRK00:1
WPT:1
SIDE:1
RDATA:1
DSKCHG:1
R23 47
RP2 10k
C40 100nF
C37 100nF
C39 100nF
C41 47µF
TITLE Kiwi - SID, Joysticks, Parport, RTC, Timer, Floppy
FILE: Seite2.sch
REVISION: V2 - September 2013
PAGE 2 OF 5
DRAWN BY: Simon Ferber

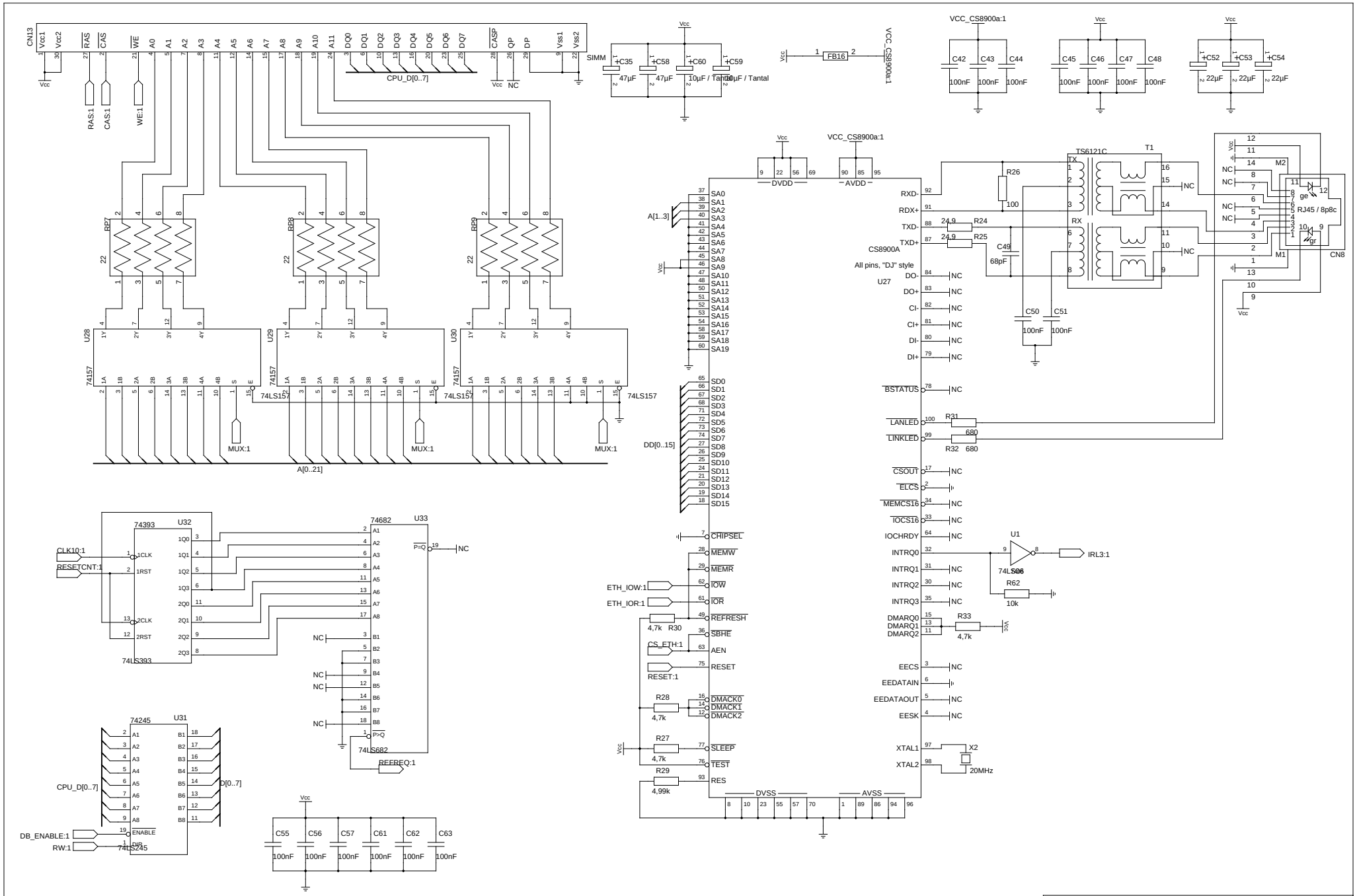

TITLE	Kiwi - DRAM, Ethernet
FILE: Seite3.sch	REVISION: V2 - September 2013
PAGE 3 OF 5	DRAWN BY: Simon Ferber

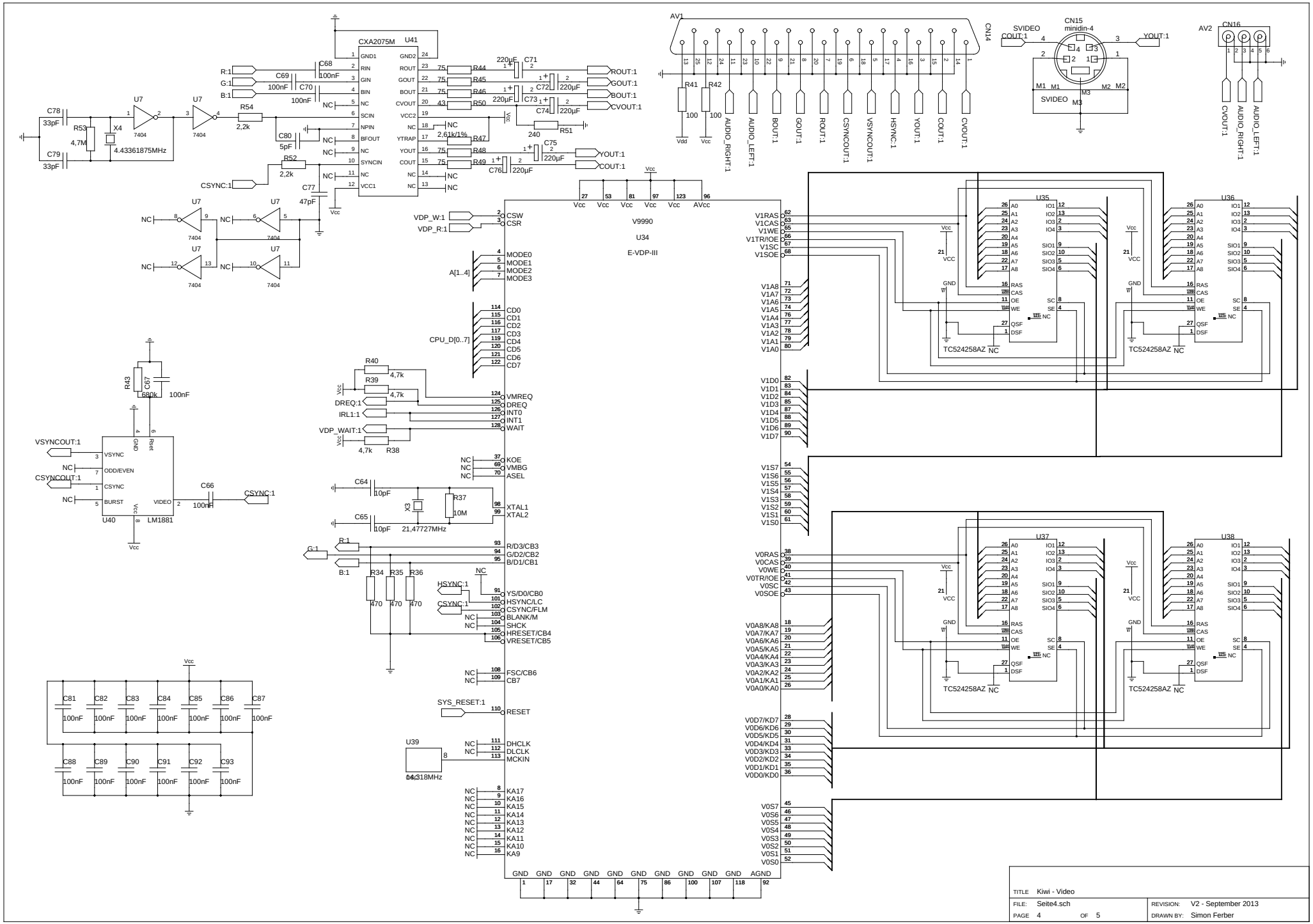

TITLE	Kiwi - Video
FILE:	Seite4.sch
PAGE	4 OF 5
REVISION:	V2 - September 2013
DRAWN BY:	Simon Ferber

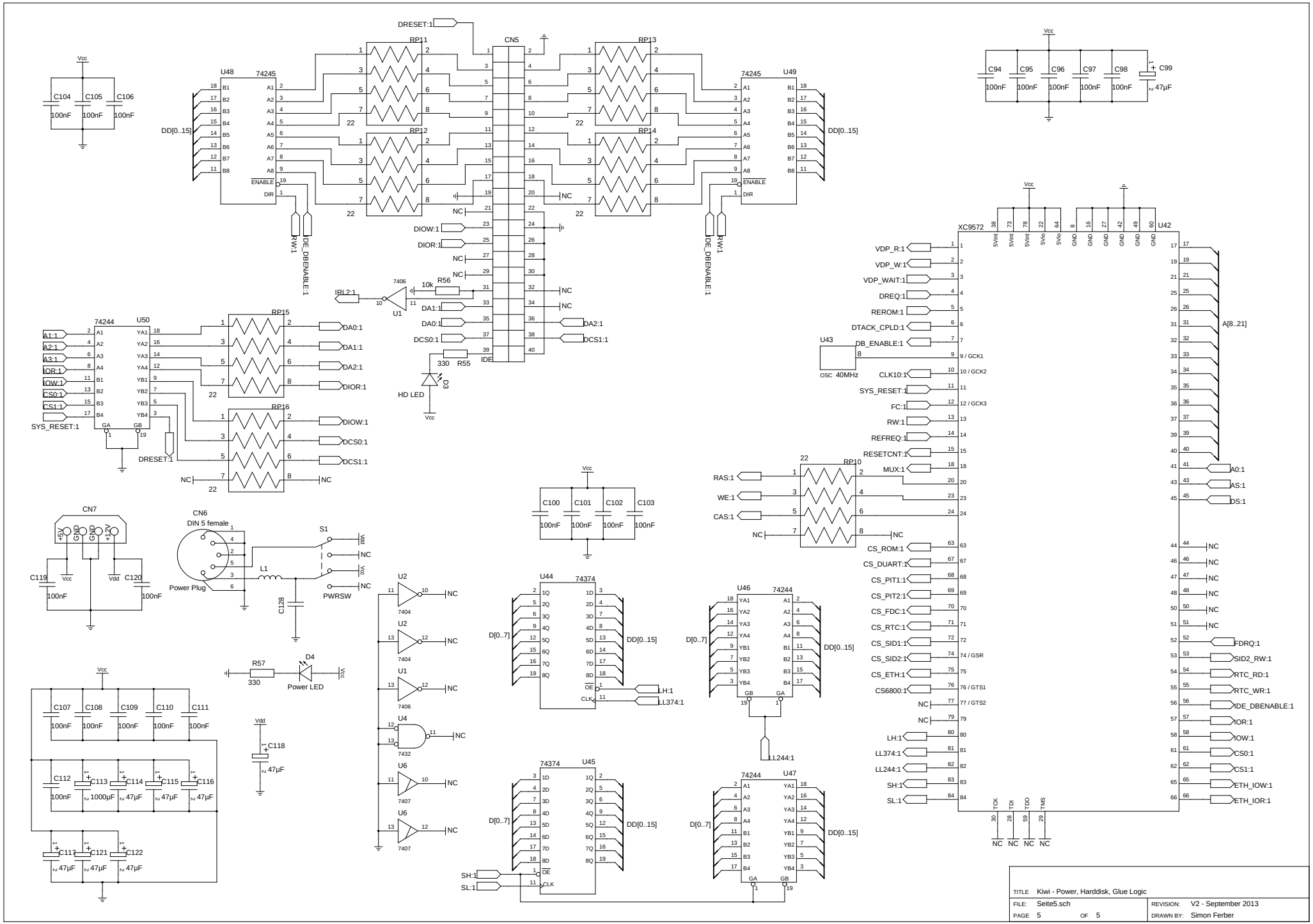

TITLE	Kiwi - Power, Harddisk, Glue Logic
FILE: Seite5.sch	REVISION: V2 - September 2013
PAGE 5 OF 5	DRAWN BY: Simon Ferber